NOTES:

1. REFER TO 3M MANUFACTURER'S LITERATURE FOR ADDITIONAL REQUIREMENTS PER U.L. LISTING OR APPROVED EQUAL.
2. REFER TO ARCHITECTURAL SHEETS FOR LOCATION OF ALL FIRE-RATED WALLS.

U.L. LISTED SYSTEM NO. W-L-1001

F RATINGS – 1,2,3 AND 4 HR
T RATINGS – 0,1,2,3 AND 4 HR
L RATINGS AT AMBIENT – LESS THAN 1 CFM/SQ FT.
L RATINGS AT 400 F – LESS THAN 1 CFM/SQ. FT.

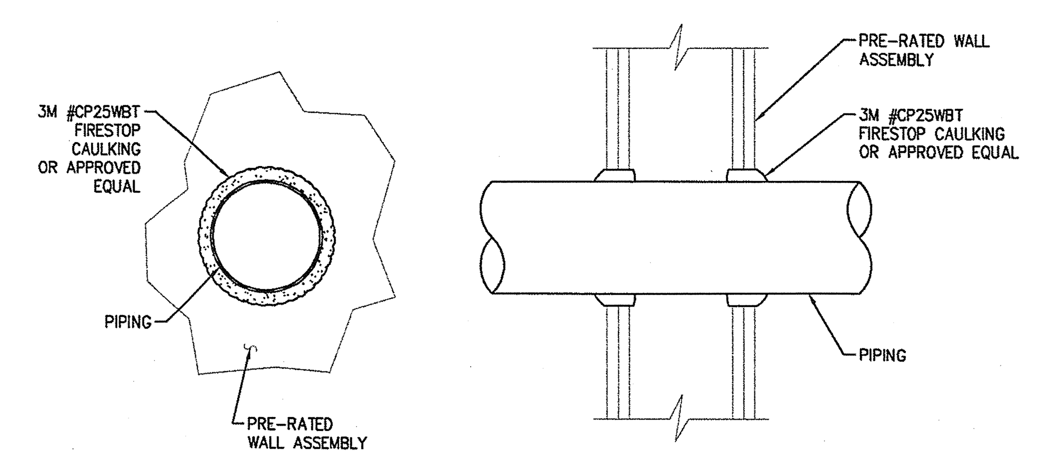

NON-INSULATED PIPE THRU FIRE-RATED WALL — SCALE NTS — 10

NOTES:

1. THE HOURLY F RATING OF THE FIRESTOP SYSTEM IS 1 HR WHEN INSTALLED IN A 1 HR FIRE RATED WALL AND 2 HR WHEN INSTALLED IN A 2 HR FIRE RATED WALL.
2. PIPE HANGER INSTALLATION SHALL BE IN ACCORDANCE REQUIREMENTS PER U.L. LISTING OR APPROVED EQUAL.
3. REFER TO ARCHITECTURAL SHEETS FOR LOCATION OF ALL FIRE-RATED WALLS.

U.L. LISTED SYSTEM NO. W-L-5039

F RATINGS – 1 AND 2 HR
T RATINGS – 3/4, 1 AND 1-1/2 HR

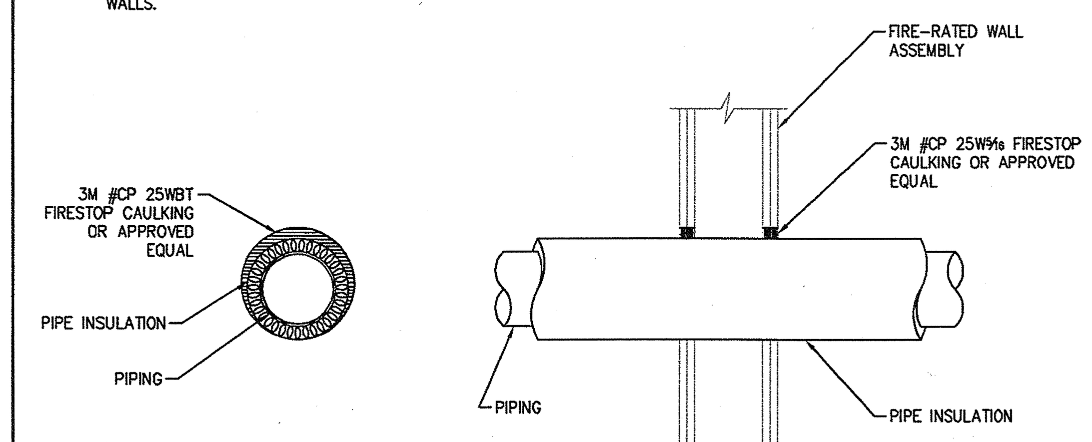

INSULATED PIPE THRU FIRE-RATED WALL — SCALE NTS — 8

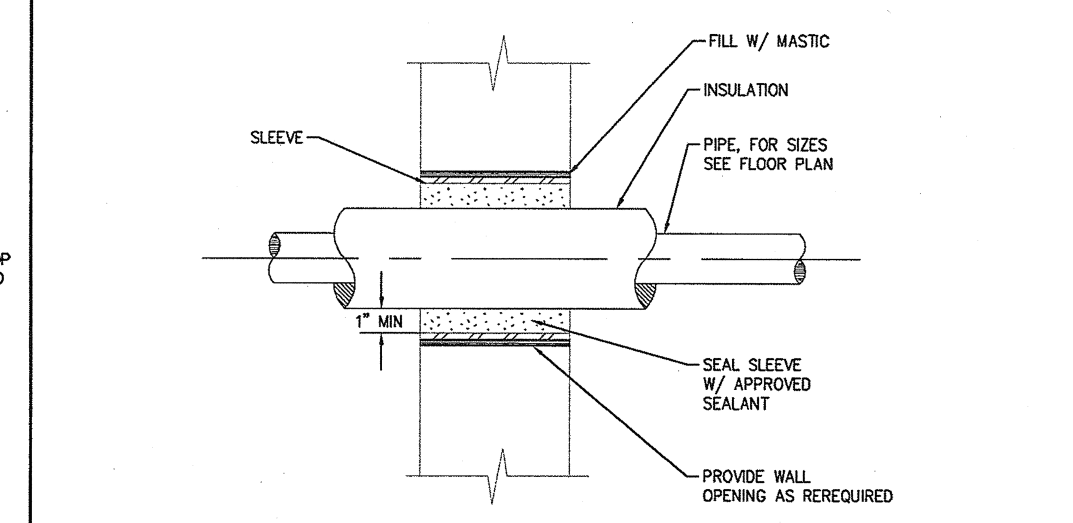

PIPE THROUGH WALL — SCALE NTS — 5

NOTES:

1. REFER TO 3M MANUFACTURER'S LITERATURE FOR ADDITIONAL REQUIREMENTS PER U.L. LISTING, OR APPROVED EQUAL.
2. PIPING SUPPORT NOT SHOWN. REFER TO OTHER DETAILS AND SPECIFICATION.

U.L. LISTED SYSTEM NO. C-AJ-1044

F RATINGS – 2,3 AND 4 HR
T RATINGS – 1 HR
L RATINGS AT AMBIENT – 2 CFM/SQ. FT.
L RATINGS AT 400 F – LESS THAN 1 CFM/SQ. FT.

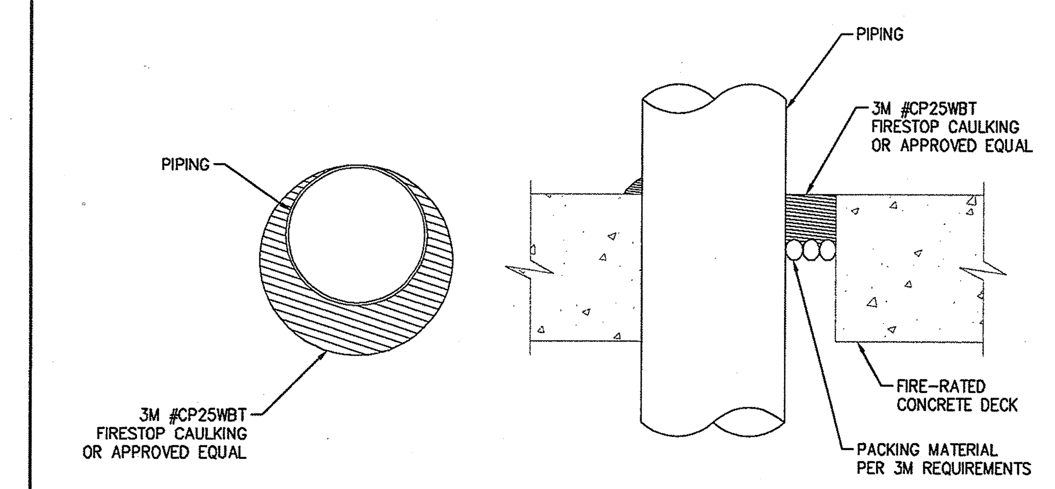

NON-INSULATED PIPE THROUGH FLOOR/CEILING — SCALE NTS — 1

NOTES:

1. REFER TO 3M MANUFACTURER'S LITERATURE FOR ADDITIONAL REQUIREMENTS PER U.L. LISTING OR APPROVED EQUAL.
2. PIPING SUPPORT NOT SHOWN. REFER TO OTHER DETAILS AND SPECIFICATIONS.

U.L. LISTED SYSTEM NO. C-AJ-5001

F RATINGS – 1-1/2, 2 AND 3 HR
T RATING – 0, 1/2, 3/4 AND 1 HR
L RATING AT AMBIENT – 2 CFM PER SQ. FT.
L RATING AT 400 F – LESS THAN 1 CFM PER SQ.FT.

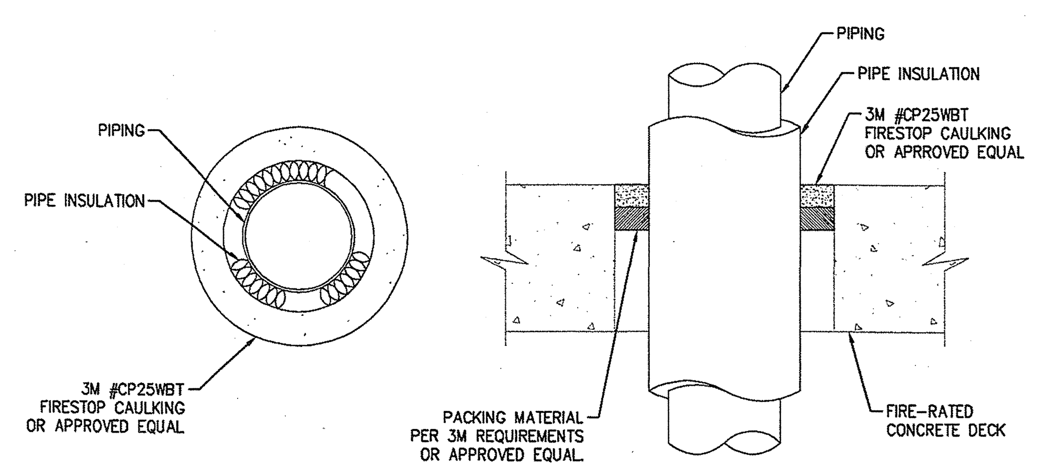

INSULATED PIPE THRU FIRE RATED FLOOR/CEILING — SCALE NTS — 11

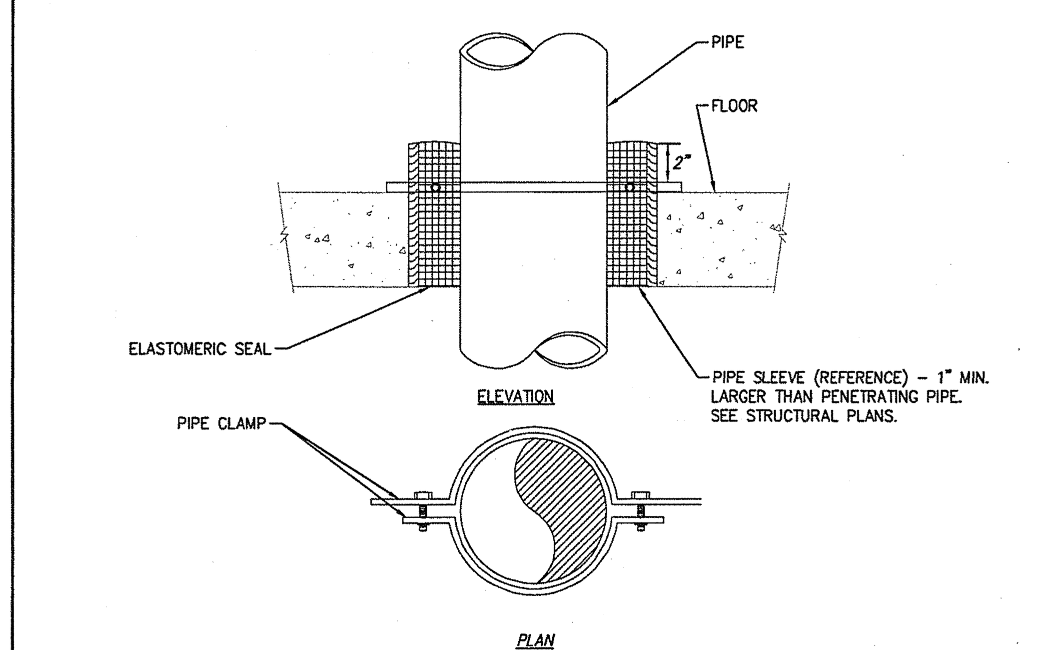

PIPE THROUGH FLOOR — SCALE NTS — 9

NOTES:

1. THIS HANGER SHALL BE USED TO SUSPEND SINGLE PIPE LINES 2" AND LARGER
2. PIPE HANGER INSTALLATION SHALL BE IN ACCORDANCE WITH SMACNA RECOMMENDATIONS AS SHOWN IN SEISMIC RESTRAINT MANUAL FOR MECHANICAL SYSTEMS, LATEST EDITION. OSHPD R #0010.
3. PROVIDE DIAGONAL BRACING PER SMACNA REQUIREMENTS, SEISMIC RESTRAINT MANUAL LATEST EDITION.

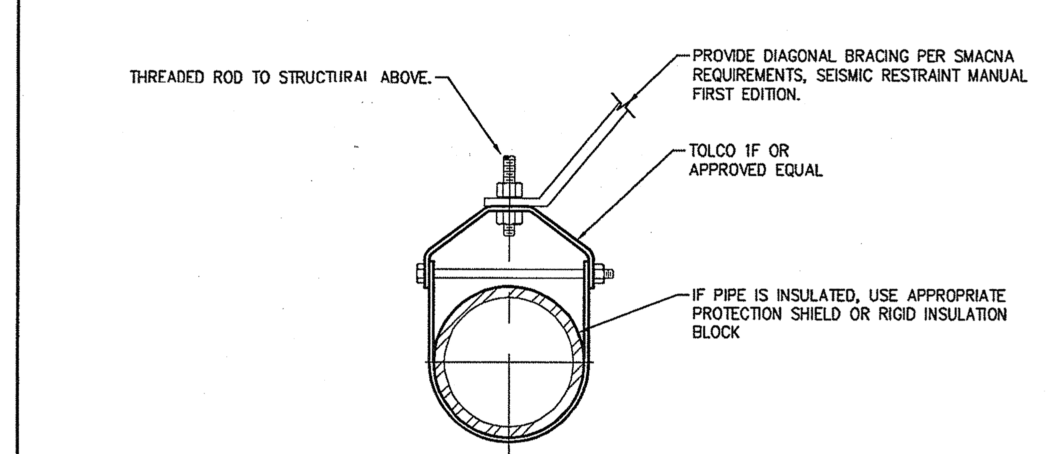

HANGER DETAIL - 2" PIPING AND LARGER — SCALE NTS — 6

NOTES:

1. THIS HANGER SHALL BE USED TO SUSPEND SINGLE PIPE LINES 1-1/2" AND SMALLER.
2. PIPE HANGER INSTALLATION SHALL BE IN ACCORDANCE WITH SMACNA RECOMMENDATIONS AS SHOWN IN SEISMIC RESTRAINT MANUAL FOR MECHANICAL SYSTEMS, LATEST EDITION.
3. PROVIDE DIAGONAL BRACING PER SMACNA REQUIREMENTS, SEISMIC RESTRAINT MANUAL LATEST EDITION.

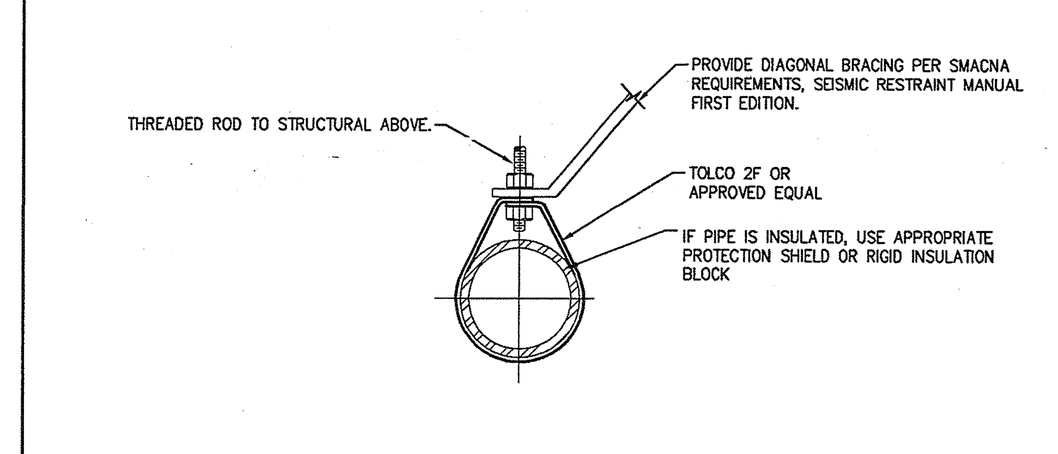

HANGER DETAIL - 1-1/2" PIPING AND SMALLER — SCALE NTS — 2

NOTES:

1. COORDINATE WITH ROOFING CONTRACTOR/MFR TO ENSURE PROPER INSTALLATION IN ACCORDANCE WITH ALL ROOFING WARRANTEES, EXISTING OR NEW AND SO AS NOT TO VOID SUCH WARRANTEES.
2. NO VENT SHALL TERMINATE WITHIN 10'-0" OF ANY AIR INTAKE OR WINDOW.
3. SEE ARCHITECTURAL DRAWINGS FOR ROOF FLASHING DETAIL.

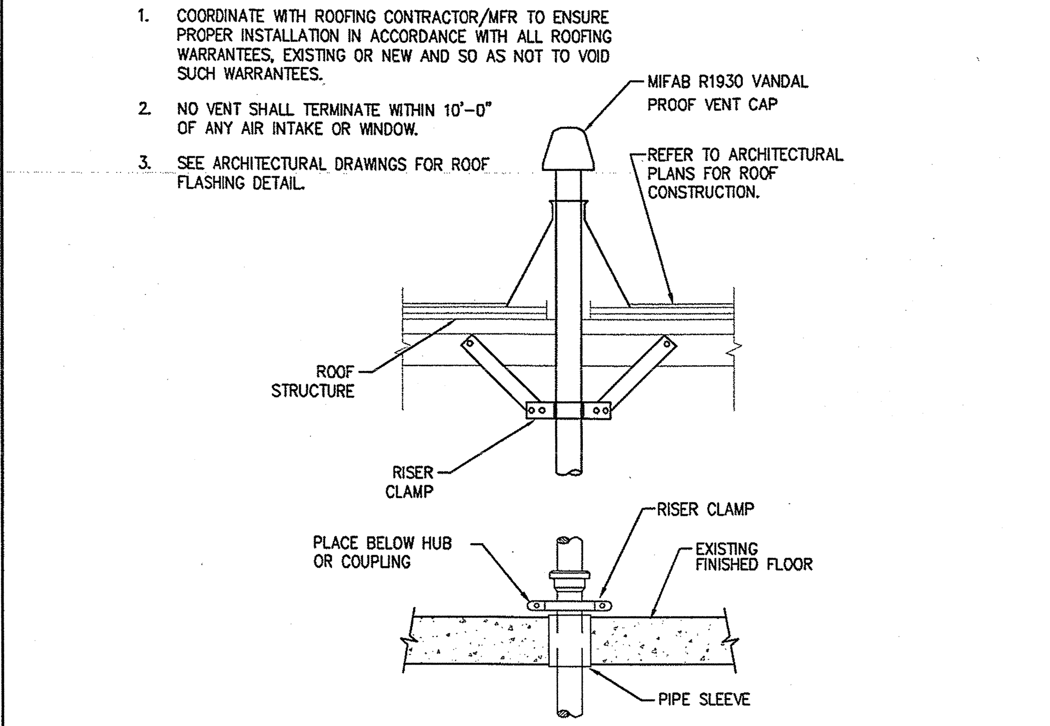

(TYP) PLUMBING VENT/PIPE THRU ROOF/FLOOR — SCALE NTS — 12

NOTES:

1. HWR BALANCING VALVES SHALL BE ADJUSTED TO MAINTAIN 5°F TEMPERATURE DIFFERENCE BETWEEN HW SUPPLY AND RETURN AND TO MAINTAIN 110°F AT EACH POINT OF RETURN.
2. PROVIDE AND INSTALL 1" T&P RELIEF PIPING FROM CONNECTION TO T&P VALVE ACROSS ROOM (WALL MOUNTED), THROUGH WALL TO FLOOR SINK. SUCH PIPING SHALL BE INSTALLED AT A MINIMUM 1/4" PER FOOT SLOPE, AND SHALL DISCHARGE AT EXTERIOR WITH AN ELBOW DIRECTED TOWARDS GRADE.
3. STRAPS ARE TO BE LOCATED AT 1/3RD AND 2/3RD SPACING ON THE VERTICAL UP THE TANK FROM THE FINISHED FLOOR OR STRUCTURE.

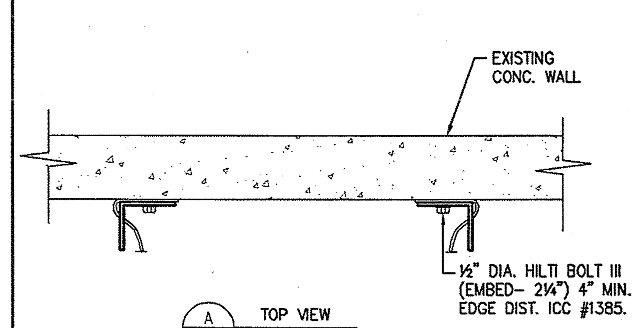

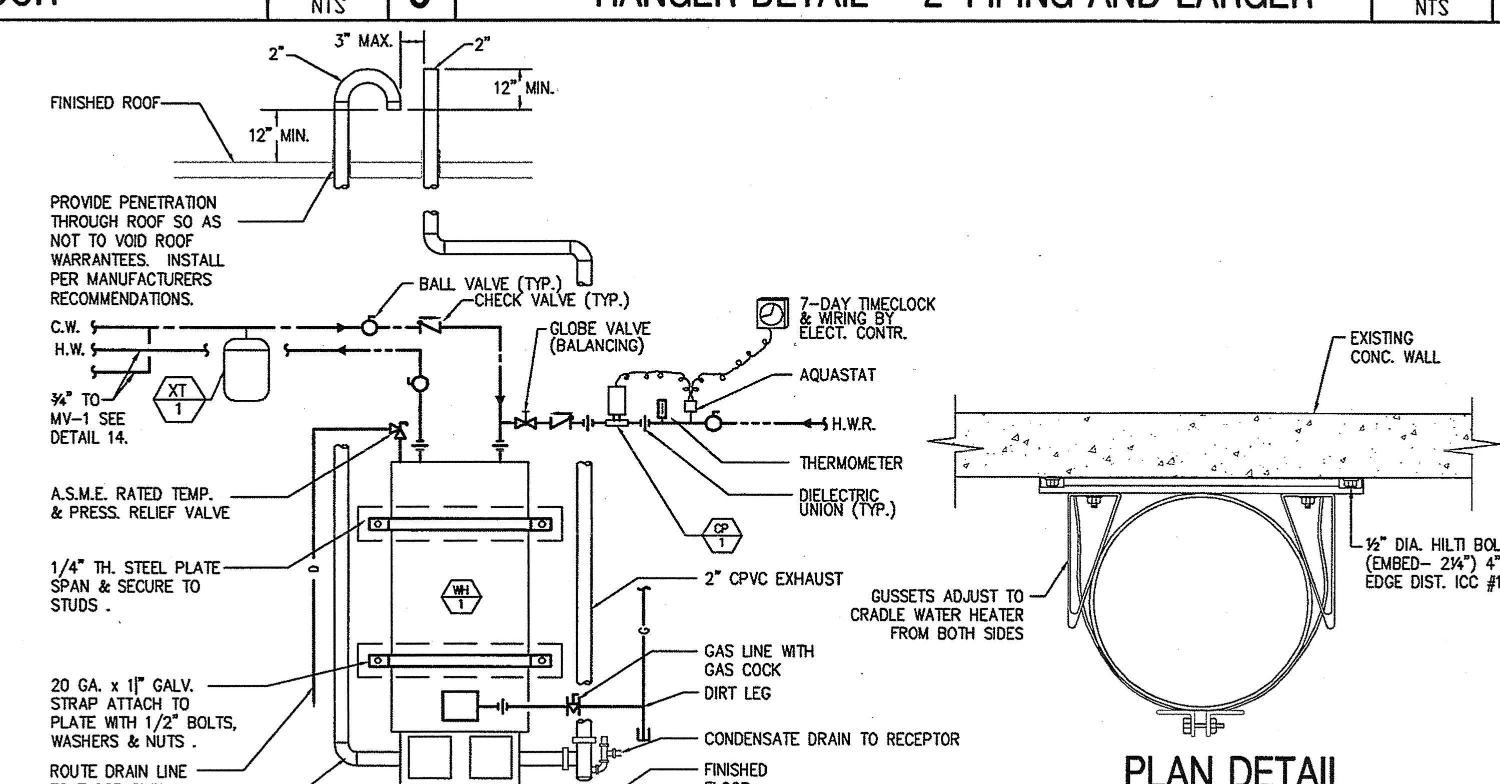

GAS WATER HEATER — SCALE NTS — 7

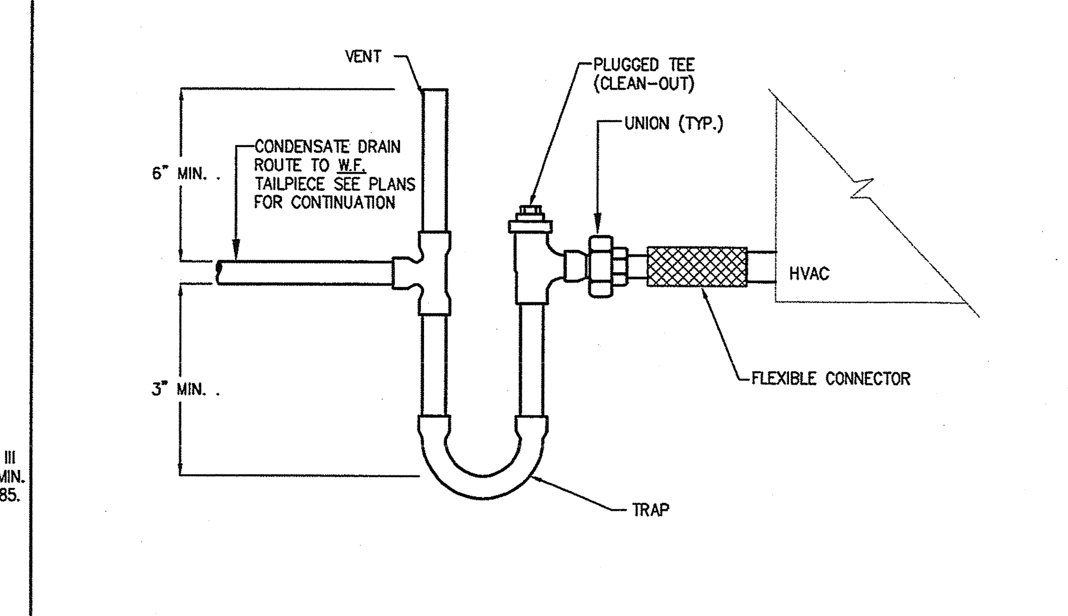

NOTES:
ALL INTERIOR CONDENSATE SHALL BE INSULATED.

(TYP) FAN COIL UNIT ABOVE CEILING — SCALE NTS — 3

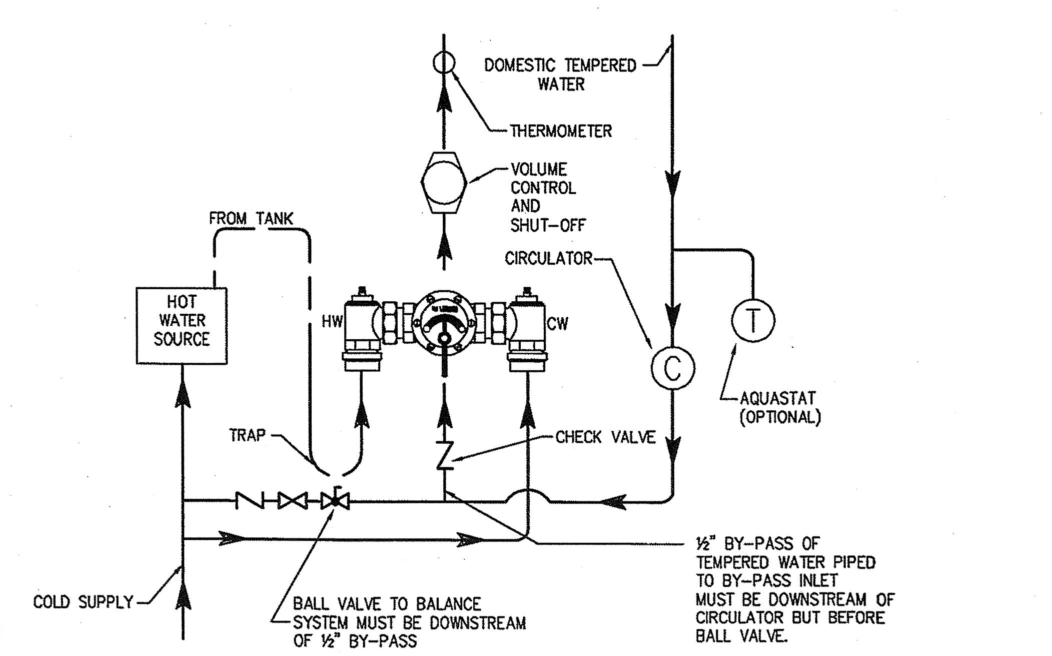

MIXING VALVE DIAGRAM, MV-1 — SCALE NTS — 14

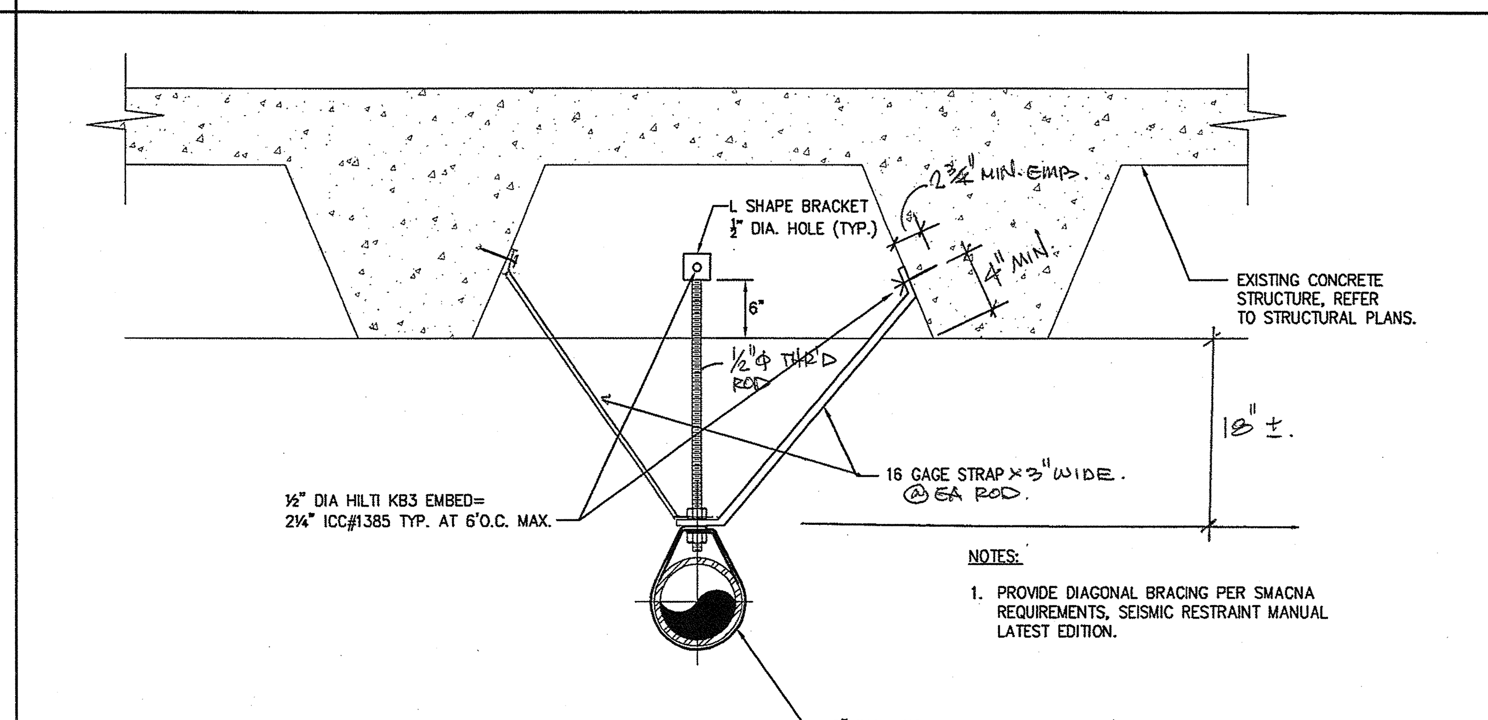

NOTES:

1. PROVIDE DIAGONAL BRACING PER SMACNA REQUIREMENTS, SEISMIC RESTRAINT MANUAL LATEST EDITION.

TYPICAL CONNECTION OF UNISTRUT TO CONCRETE DECK DETAIL — SCALE NTS — 13

NOTES THIS DETAIL:

1. PROVIDE STAINLESS STEEL ACCESS PANELS FOR ALL WATER HAMMER ARRESTORS.

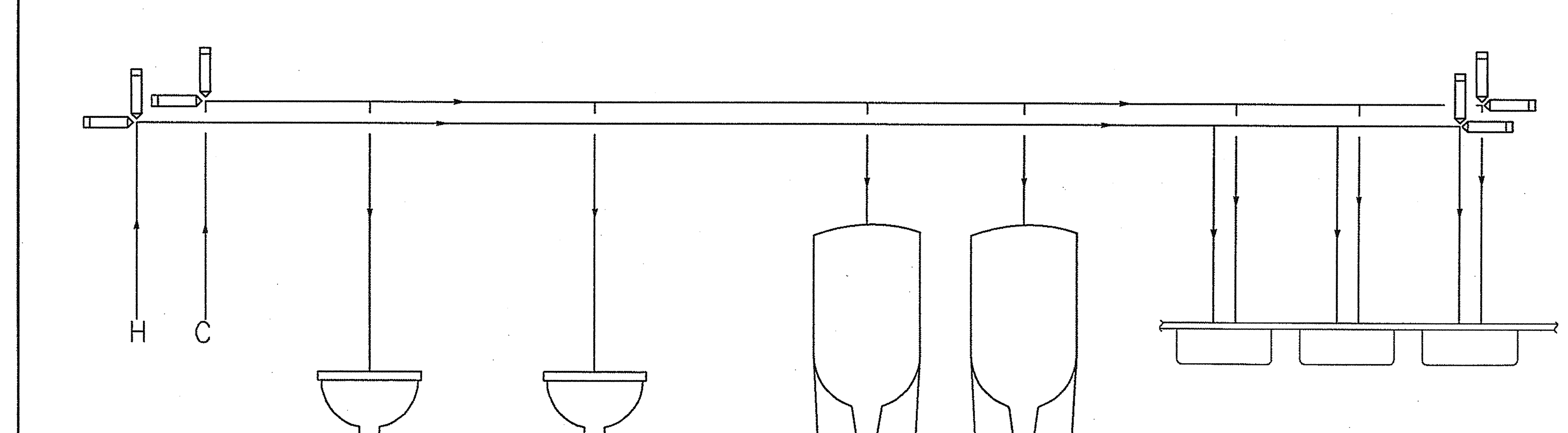

LOCATION OF WATER HAMMER ARRESTORS IN A SYSTEM (TYP.) — SCALE NTS — 4

SADDLEBACK COLLEGE

gkkworks
2355 Main Street Suite 220
Irvine | CA 92614
949 250 1500
949 955 2708 fax

Architect Seal

Consultant and Seal

REGISTERED PROFESSIONAL ENGINEER No. 24311 MECHANICAL STATE OF CALIFORNIA

Fundament & Associates Inc.
Engineering Consultants
26 Executive Park, Suite 100, Irvine CA 92614 (949) 251-1131

Agency Approval

IDENTIFICATION STAMP
DIV. OF THE STATE ARCHITECT
OFFICE OF REGULATION SERVICES
04 109129
DATE MAY 0 7 2008

No.	Date	Revision/Issue

Project Name

JAMES B. UTT MEMORIAL LEARNING RESOURCE CENTER RENOVATION
28000 Marguerite Parkway
Mission Viejo, California 92692

Checked By	Drawn By
EM	AD

Sheet Title

PLUMBING DETAILS SHEET

Sheet Number

P5.00

Project Number	Scale
04-111	NTS

© 2008 gkkworks, All Rights Reserved
NO PART OF THE CONTENTS OF THIS DOCUMENT MAY BE REPRODUCED OR TRANSMITTED IN ANY FORM OR BY ANY MEANS WITHOUT THE WRITTEN PERMISSION OF GKKWORKS.