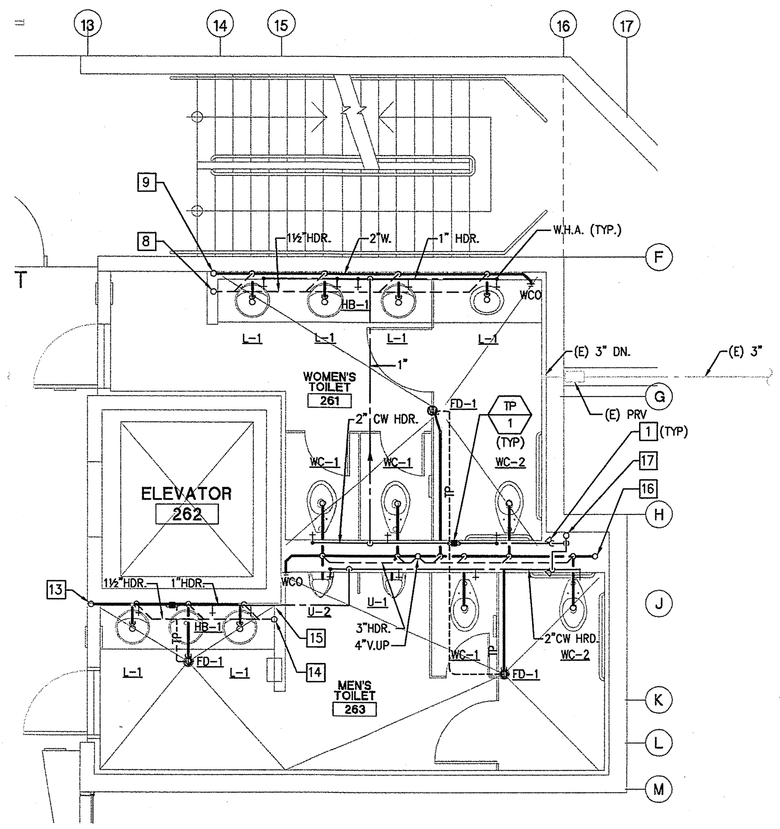

SECOND FLOOR ENLARGED RESTROOM PLUMBING PLAN — SCALE 1/4" = 1'-0" — 2

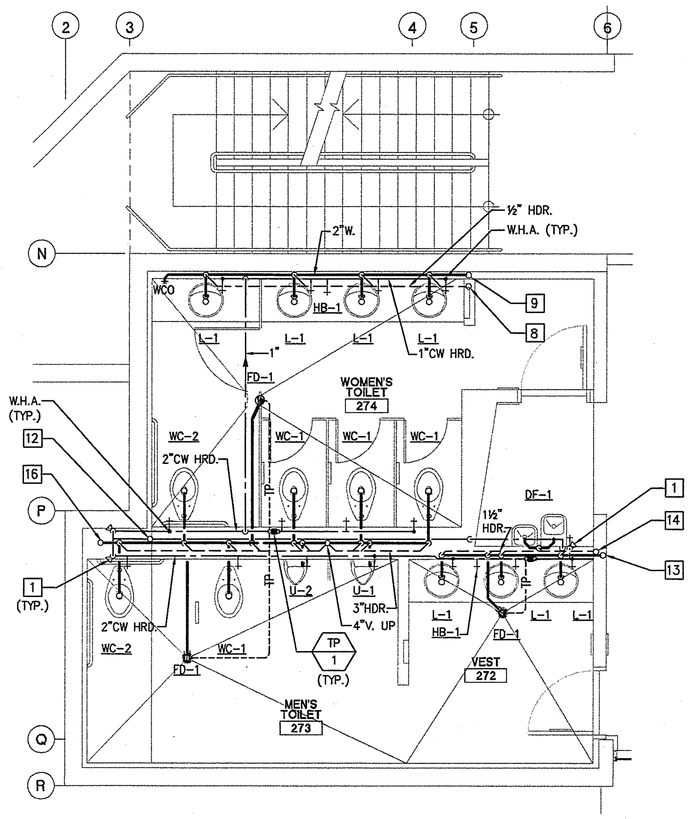

SECOND FLOOR ENLARGED RESTROOM PLUMBING PLAN — SCALE 1/4" = 1'-0" — 1

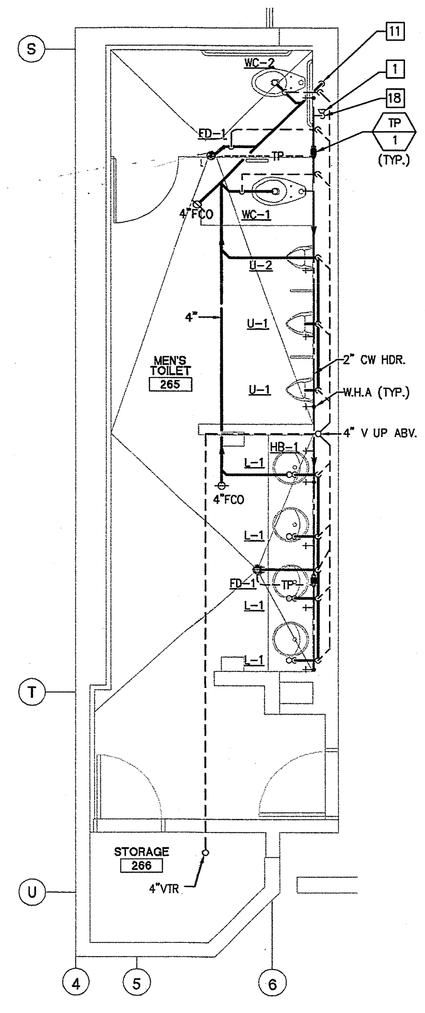

SECOND FLOOR ENLARGED RESTROOM PLUMBING PLAN — SCALE 1/4"=1'-0" — 4

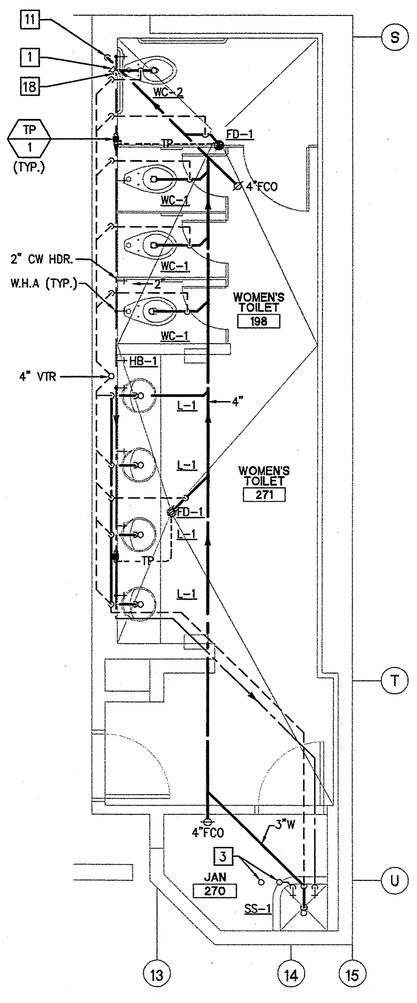

SECOND FLOOR ENLARGED RESTROOM PLUMBING PLAN — SCALE 1/4"=1'-0" — 3

GENERAL NOTES

1. REFER TO SHEET P0.01 FOR GENERAL NOTES.

KEYNOTES

1. SHUT-OFF VALVE IN STAINLESS STEEL ACCESS PANEL.
2. 3" COLD WATER UP FROM ABOVE AND DOWN FROM BELOW.
3. ¾" HOT WATER & HOT WATER RETURN UP FROM ABOVE AND DOWN FROM BELOW.
4. CONNECT NEW 4" WASTE TO EXISTING 4" WASTE.
5. CONNECT NEW 2½" COLD WATER TO EXISTING 2½" COLD WATER.
6. CONNECT NEW 3" WASTE TO EXISTING 3" WASTE.
7. CONNECT NEW 3" COLD WATER TO EXISTING 3" COLD WATER.
8. 2" VENT UP AND DOWN.
9. 3" WASTE STACK UP AND DOWN.
10. 1" COLD WATER UP AND DOWN.
11. 4" WASTE STACK DOWN TO BELOW.
12. 2" COLD WATER UP AND DOWN.
13. 2" WASTE STACK UP AND DOWN.
14. 2" VENT UP FROM BELOW TO ABOVE.
15. ¾" COLD WATER UP AND DOWN.
16. 4" WASTE STACK UP AND DOWN.
17. 3" COLD WATER UP FROM BELOW TO ABOVE.
18. 2" COLD WATER UP FROM BELOW.

SADDLEBACK COLLEGE

gkkworks
2355 Main Street Suite 220
Irvine | CA 92614
949 250 1500
949 955 2708 fax

Architect Seal

Consultant and Seal

REGISTERED PROFESSIONAL ENGINEER — No. 24331 — MECHANICAL — STATE OF CALIFORNIA

Fundament & Associates Inc.
Engineering Consultants
26 Executive Park, Suite 100, Irvine CA 92614 (949) 251-1131

Agency Approval

CERTIFICATION STAMP
DIV. OF THE STATE ARCHITECT
OFFICE OF SERVICES
04 109129
DATE MAY 07 2008

No.	Date	Revision/Issue

Project Name

JAMES B. UTT MEMORIAL LEARNING RESOURCE CENTER RENOVATION
28000 Marguerite Parkway
Mission Viejo, California 92692

Checked By	Drawn By
EM	AD

Sheet Title

PLUMBING ENLARGED DETAILS

Sheet Number

P3.01

Project Number	Scale
04-111	1/4"=1'-0"

©2008 gkkworks, All Rights Reserved
NO PART OF THE CONTENTS OF THIS DOCUMENT MAY BE REPRODUCED OR TRANSMITTED IN ANY FORM OR BY ANY MEANS WITHOUT THE WRITTEN PERMISSION OF GKKWORKS.

J:\7113-Saddleback Library\Plumb\7113-P301.dwg 04/16/2008

OR31777-51697 P1 S2 - R C CONSTRUCTION SERVICES - PG 191 OF 235 (P1 S2) 1 SET.TIF - 2/3/2010 - 15:34