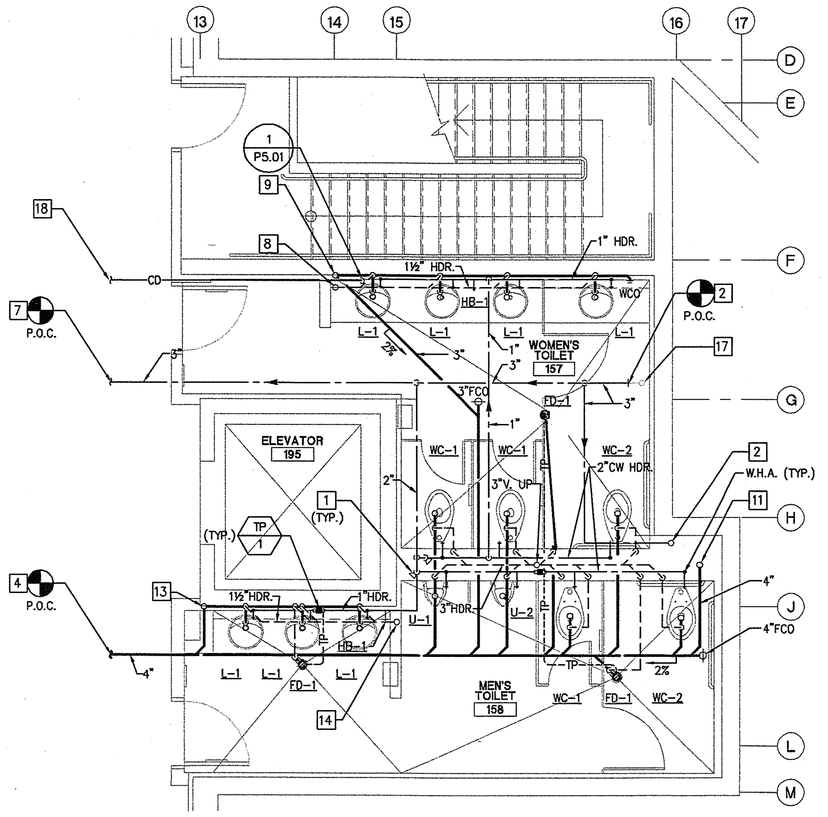

FIRST FLOOR ENLARGED RESTROOM PLUMBING PLAN — SCALE 1/4" = 1'-0" — 2

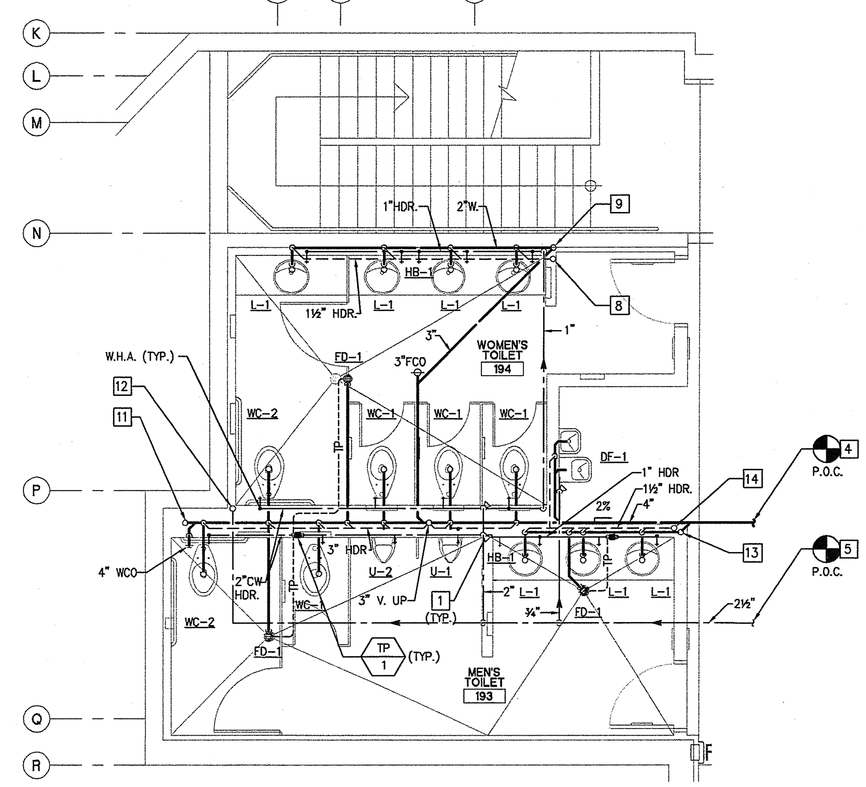

FIRST FLOOR ENLARGED RESTROOM PLUMBING PLAN — SCALE 1/4" = 1'-0" — 1

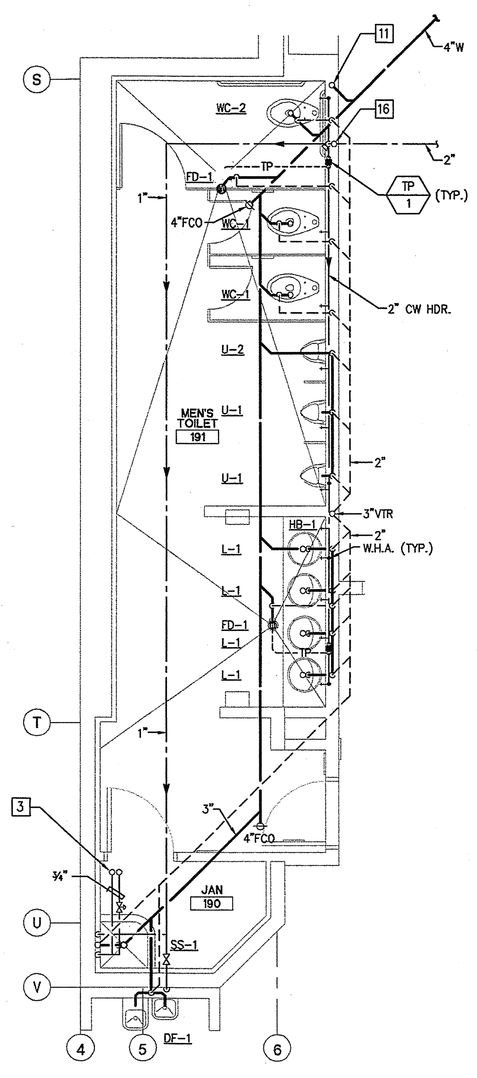

FIRST FLOOR ENLARGED RESTROOM PLUMBING PLAN — SCALE 1/4"=1'-0" — 4

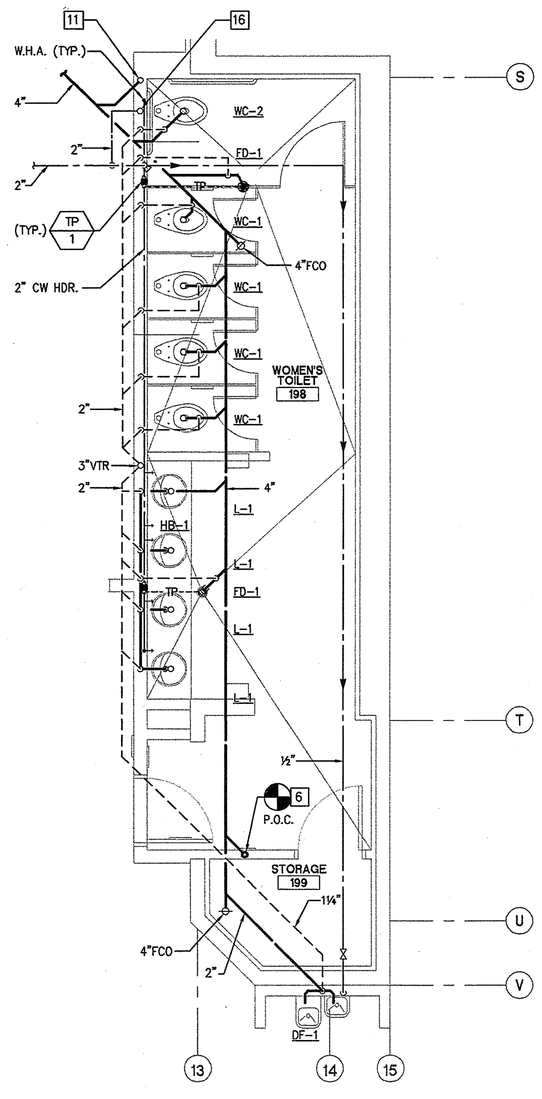

FIRST FLOOR ENLARGED RESTROOM PLUMBING PLAN — SCALE 1/4"=1'-0" — 3

GENERAL NOTES

1. REFER TO SHEET P0.01 FOR GENERAL NOTES.

KEYNOTES

1. SHUT-OFF VALVE IN STAINLESS STEEL ACCESS PANEL.
2. 3" COLD WATER UP TO ABOVE.
3. ¾" HOT WATER UP FROM ABOVE AND DOWN FROM BELOW.
4. CONNECT NEW 4" WASTE TO EXISTING 4" WASTE.
5. CONNECT NEW 2½" COLD WATER TO EXISTING 2½" COLD WATER.
6. CONNECT NEW 3" WASTE TO EXISTING 3" WASTE.
7. CONNECT NEW 3" COLD WATER TO EXISTING 3" COLD WATER.
8. 2" VENT UP AND DOWN.
9. 3" WASTE STACK UP AND DOWN.
10. 1" COLD WATER UP AND DOWN.
11. 4" WASTE STACK DOWN FROM ABOVE, TO BELOW FLOOR.
12. 2" COLD WATER UP TO ABOVE.
13. 2" WASTE STACK UP AND DOWN.
14. 2" VENT UP TO ABOVE.
15. ¾" COLD WATER UP AND DOWN.
16. 2" COLD WATER UP TO ABOVE.
17. 3" COLD WATER UP TO ABOVE.
18. REFER TO P2.01 FOR CONTINUATION.

SADDLEBACK COLLEGE

gkkworks
2355 Main Street Suite 220
Irvine | CA 92614
949 250 1500
949 955 2708 fax

Architect Seal

Consultant and Seal

REGISTERED PROFESSIONAL ENGINEER — PAUL FUNDAMENT — No. 24517 — MECHANICAL — STATE OF CALIFORNIA

Fundament & Associates Inc.
Engineering Consultants
26 Executive Park, Suite 100, Irvine CA 92614 (949) 251-1131

Agency Approval

REGISTRATION STAMP — DIV OF THE STATE ARCHITECT — OFFICE OF REGISTRATION SERVICES — 04 109129 — MAY 07 2008

No.	Date	Revision/Issue

Project Name

JAMES B. UTT MEMORIAL LEARNING RESOURCE CENTER RENOVATION

28000 Marguerite Parkway
Mission Viejo, California 92692

Checked By	Drawn By
EM	AD

Sheet Title

PLUMBING ENLARGED DETAILS

Sheet Number

P3.00

Project Number	Scale
04-111	1/4"=1'-0"

© 2008 gkkworks, All Rights Reserved
NO PART OF THE CONTENTS OF THIS DOCUMENT MAY BE REPRODUCED OR TRANSMITTED IN ANY FORM OR BY ANY MEANS WITHOUT THE WRITTEN PERMISSION OF GKKWORKS.

OAS1777-51697 P1 S2 - R C CONSTRUCTION SERVICES - PG 190 OF 235 (P1 S2) 1 SET.TIF - 2/3/2010 - 15:34

J:\7113-Saddleback Library\Plumb\7113-P300.dwg 04/16/2008